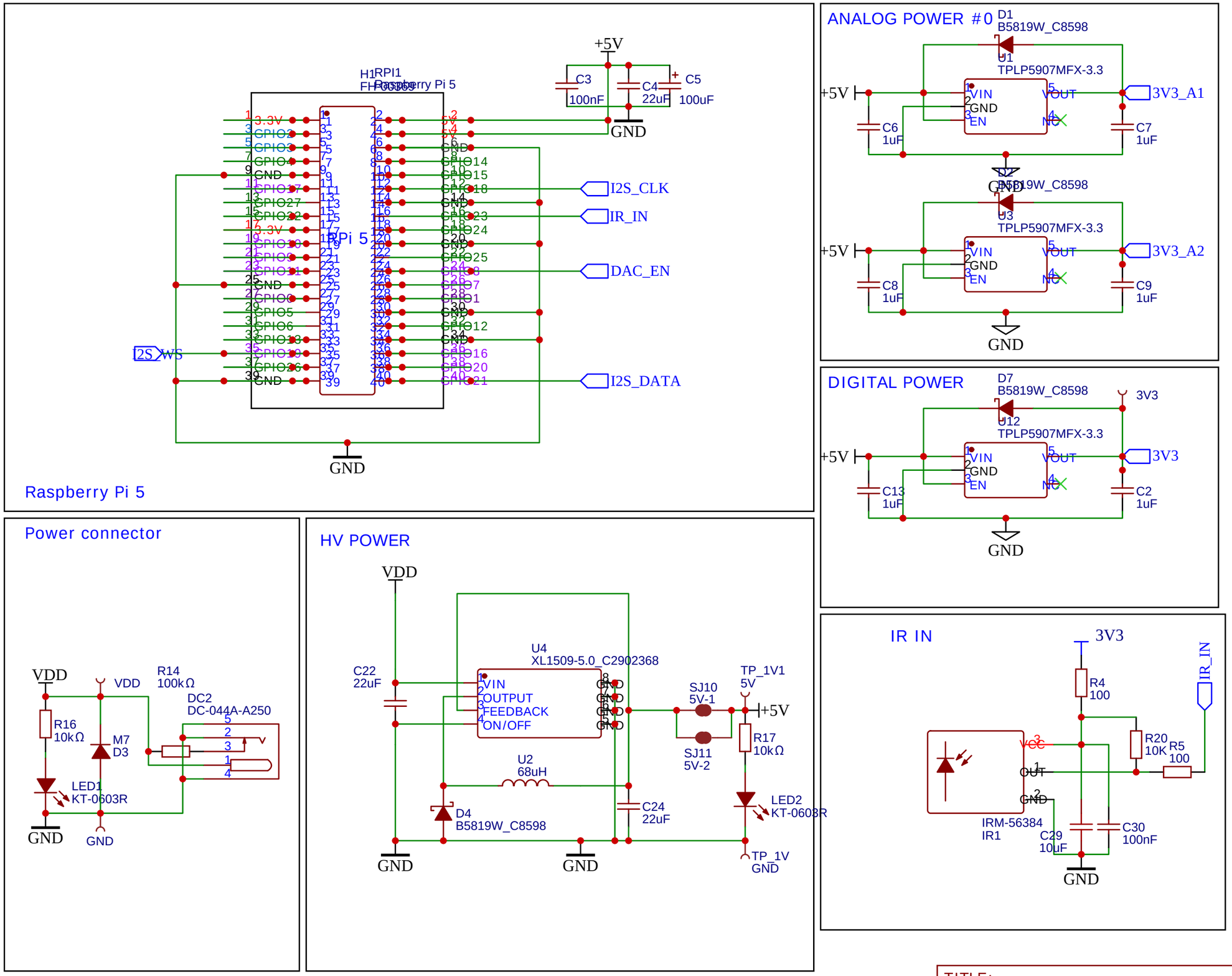

TITLE: Amped Raspberry Pi Hat (1X)

REV: F1

Company: Sonocotta

Sheet: 1/2

Date: 2026-03-20

Drawn By: andriy@sonocotta.com

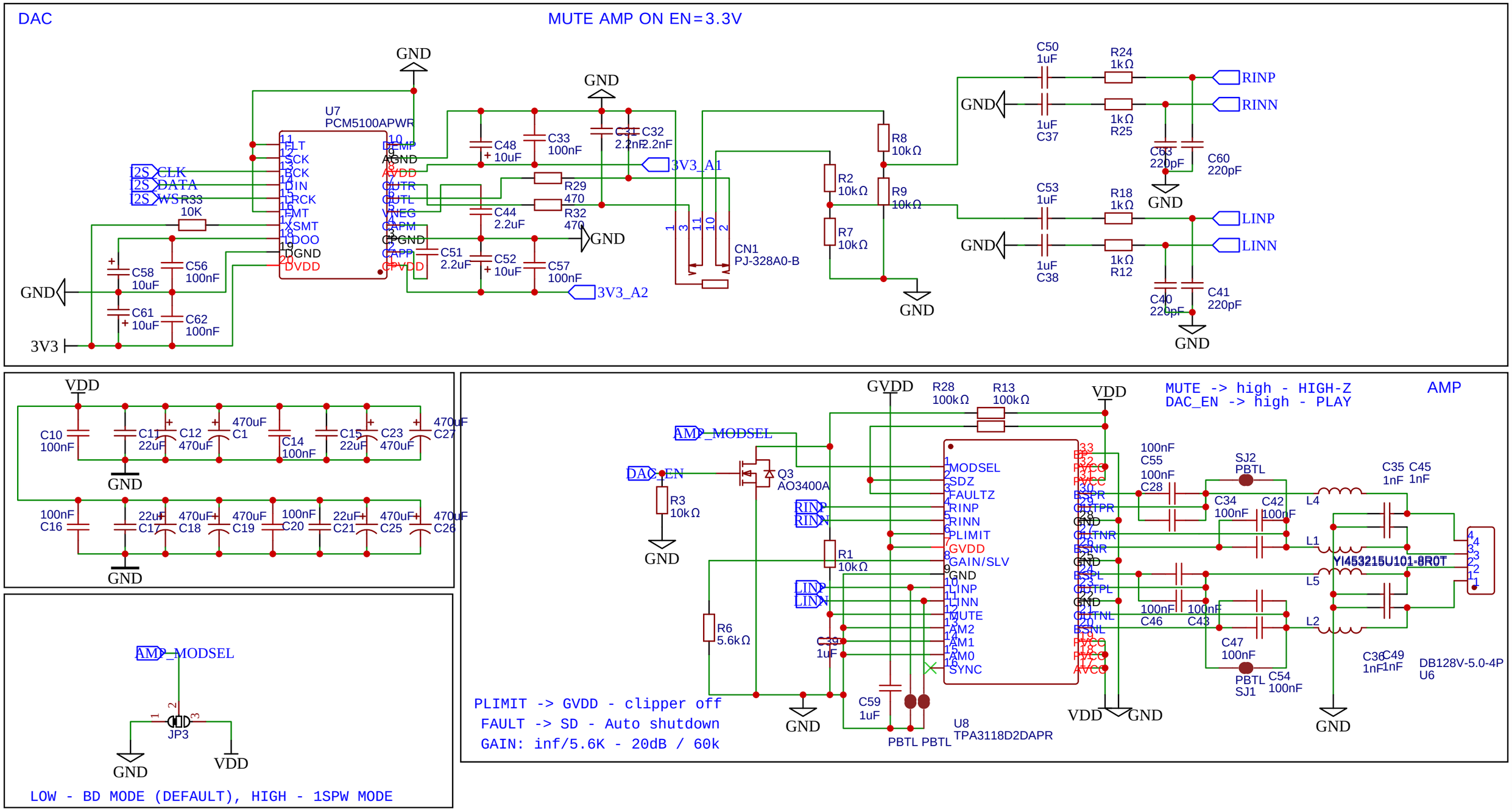

TITLE: Amped Raspberry Pi Hat (1X)		REV: F1
EasyEDA	Company: Sonocotta	Sheet: 2/2
	Date: 2026-03-20	Drawn By: andriy@sonocotta.com